Work Order ID 65548

January 19, 2011 1:36:32 PM

Item ID: D3649-041 **Accept**

Revision ID:

Item Name: Tunnel Bottom Panel Assembly

Setup **Start**

Stop

Start Date: 1/20/11 **Start Qty:** 5.00

Required Date: 2/04/11 **Req'd Qty:** 5.00

Cust Item ID:

Customer:

Reference:

Run **Start**

Stop

Approvals: **Process Plan:** UW **Date:** 11-01-19 **Tooling:** ____ **Date:** ____

QC: ____ **Date:** ____ **SPC (Y/N):** ____ **Date:** ____

Sequence ID/ Work Center ID	Operation Description	Set Up/ Run Hours	Tool ID	Tool #	Plan Code	Accept Qty	Reject Qty	Reject Number	Insp. Stamp
Draw Nbr D3649	**Revision Nbr** Rev B								
100 Waterjet FLOW CNC Waterjet 304 .019	FLOW WATER JET **Memo** 1-Cut as per Dwg D3649 ☐Dwg Rev: B ☐Prog Rev: B ☐2-Deburr if necessary	0.00 0.00				RJ1-1-26			(6)
110 QC Quality Control	QC2- Inspect parts off machine FAI/FAIB **Memo**	0.00 0.00				HB11-1-26			
120 QC Quality Control	QC8- Inspect parts - second check **Memo**	0.00 0.00 Sul 01/27				(x6)			

Dart Aerospace Ltd

W/O:		WORK ORDER CHANGES					
DATE	STEP	PROCEDURE CHANGE	By	Date	Qty	Approval Chief Eng / Prod Mgr	Approval QC Inspector

Part No: ____________ **PAR #:** ______ **Fault Category:** ____________ **NCR:** Yes No **DQA:** _____ **Date:** _________

Resolution: ____________ **Disposition:** ____________ **QA: N/C Closed:** __________ **Date:** _________

NCR:		WORK ORDER NON-CONFORMANCE (NCR)						
DATE	STEP	Description of NC Section A	Corrective Action Section B			Verification Section C	Approval Chief Eng	Approval QC Inspector
			Initial Chief Eng	Action Description Chief Eng	Sign & Date			

NOTE: Date & initial all entries

Work Order ID 65548

January 19, 2011 1:36:32 PM

Item ID: D3649-041 **Accept** **Setup Start**

Revision ID: **Stop**

Item Name: Tunnel Bottom Panel Assembly

Start Date: 1/20/11 **Start Qty:** 5.00 **Cust Item ID:**

Required Date: 2/04/11 **Req'd Qty:** 5.00 **Customer:**

Reference:

Run Start

Approvals: **Process Plan:** ______ **Date:** ______ **Tooling:** ______ **Date:** ______

QC: ______ **Date:** ______ **SPC (Y/N):** ______ **Date:** ______ **Stop**

Sequence ID/ Work Center ID	Operation Description	Set Up/ Run Hours	Tool ID	Tool #	Plan Code	Accept Qty	Reject Qty	Reject Number	Insp. Stamp
130 Brake NC Brake NC	NC BRAKE **Memo** Form as per Dwg D3649	0.00 0.00	SA 11/02/15			6			
140 QC Quality Control	QC5- Inspect part completeness to step on W/O **Memo**	0.00 0.00	S 11/02/15			+6			
150 Small Fab Small Fab	Small Fab **Memo** 1- Form dimple for MS20427M3 rivet per dwg D3649□*********ensure dimples are on the proper side**********□2-Assemble nutplates as per dwg D3649	0.00 0.00				11/02/16 6			

Dart Aerospace Ltd

W/O:		WORK ORDER CHANGES					
DATE	STEP	PROCEDURE CHANGE	By	Date	Qty	Approval Chief Eng / Prod Mgr	Approval QC Inspector

Part No: ____________________ **PAR #:** _______ **Fault Category:** ________________ **NCR:** Yes No **DQA:** _____ **Date:** _________

Resolution: ____________________ **Disposition:** ____________________ **QA: N/C Closed:** __________ **Date:** _________

NCR:		WORK ORDER NON-CONFORMANCE (NCR)						
DATE	STEP	Description of NC Section A	Corrective Action Section B			Verification Section C	Approval Chief Eng	Approval QC Inspector
			Initial Chief Eng	Action Description Chief Eng	Sign & Date			

NOTE: Date & initial all entries

H:\fFORMS\Quality Assurance\approved QA\NCRWO RevE

Work Order ID 65548

January 19, 2011 1:36:33 PM

Item ID: D3649-041 **Accept**

Revision ID:

Item Name: Tunnel Bottom Panel Assembly

Setup **Start** / **Stop**

Start Date: 1/20/11 **Start Qty:** 5.00

Required Date: 2/04/11 **Req'd Qty:** 5.00

Cust Item ID:

Customer:

Reference:

Run **Start** / **Stop**

Approvals: **Process Plan:** ________ **Date:** ________ **Tooling:** ________ **Date:** ________

QC: ________ **Date:** ________ **SPC (Y/N):** ________ **Date:** ________

Sequence ID/ Work Center ID	Operation Description	Set Up/ Run Hours	Tool ID	Tool #	Plan Code	Accept Qty	Reject Qty	Reject Number	Insp. Stamp
160 QC Quality Control	QC5- Inspect part completeness to step on W/O **Memo**	0.00 0.00 S 11/02/16				(x6)			
170 Packaging Packaging	Identify as per dwg & Stock Location: A10 **Memo**	0.00 0.00				11/2/16		SF	
180 QC Quality Control	QC21- Final Inspection - Work Order Release **Memo**	0.00 0.00				11/02/17		[signature] MF 11-02-16	

Dart Aerospace Ltd

W/O:		WORK ORDER CHANGES					
DATE	STEP	PROCEDURE CHANGE	By	Date	Qty	Approval Chief Eng / Prod Mgr	Approval QC Inspector

Part No: ____________________ **PAR #:** _______ **Fault Category:** _________________ **NCR:** Yes No **DQA:** _____ **Date:** _________

Resolution: ___________________ **Disposition:** ____________________ **QA: N/C Closed:** _________ **Date:** _________

NCR:		WORK ORDER NON-CONFORMANCE (NCR)						
DATE	STEP	Description of NC Section A	Corrective Action Section B			Verification Section C	Approval Chief Eng	Approval QC Inspector
			Initial Chief Eng	Action Description Chief Eng	Sign & Date			

NOTE: Date & initial all entries

H:\fFORMS\Quality Assurance\approved QA\NCRWO RevE

Picklist Print

January 19, 2011 1:36:31 PM

T

Work Order ID: 65548

Parent Item: D3649-041

Parent Item Name: Tunnel Bottom Panel Assembly

Start Date: 1/20/11 **Required Date:** 2/04/11

Start Qty: 5.00 **Required Qty:** 5.00

Comments:
IPP Rev:A New Issue 07-09-26 EC verified by: DD
IPP Rev:B ECN 1113P 08-01-22 DD verified by: EC
IPP Rev:C Ecn1162 08-04-02 DD verified by:EC

Component Item ID/ Item Name	Replacement Item ID	Mfg/ Purch	Bin Item	Primary Location	Last Location	Route Seq ID	Unit of Measure	Qty on Hand	Qty per Kit	Total Qty	Qty Issued	Date Issued	Status
M304S26GA 304/316 0.018 SHEET		Purchased	No			150	sf	109.6600	6.069	31.94211			
										B11-1-26 (5)			
				Location		**Loc Qty**		**Loc Code**					
				MAT20		109.66							
				109398		20.06							
				112885		89.6				112885			
MS20427M3-3 Rivet		Purchased	No			110	Each	1,364.000	88	440			
										E 11/02/16			
				Location		**Loc Qty**		**Loc Code**					
				ST318		1364							
				115589		1364				440			
MS21060-3K Nut Plate		Purchased	No			150	Each	76.0000	22	110			
										E 11/02/16 M116857 (110x)			
				Location		**Loc Qty**		**Loc Code**					
				ST302		76							
				109590		76							
MS21062-3K Nut Plate		Purchased	No			150	Each	216.0000	22	110			
										E 11/02/16			
				Location		**Loc Qty**		**Loc Code**					
				ST302		216							
				109590		216				110			

Dart Aerospace Ltd

W/O:		WORK ORDER CHANGES					
DATE	STEP	PROCEDURE CHANGE	By	Date	Qty	Approval Chief Eng / Prod Mgr	Approval QC Inspector

Part No: ____________________ **PAR #:** _______ **Fault Category:** __________________ **NCR:** Yes No **DQA:** _____ **Date:** _________

Resolution: ____________________ **Disposition:** ____________________ **QA: N/C Closed:** __________ **Date:** _________

NCR:		WORK ORDER NON-CONFORMANCE (NCR)						
DATE	STEP	Description of NC Section A	Corrective Action Section B			Verification Section C	Approval Chief Eng	Approval QC Inspector
			Initial Chief Eng	Action Description Chief Eng	Sign & Date			

NOTE: Date & initial all entries

H:\fFORMS\Quality Assurance\approved QA\NCRWO RevE

DART AEROSPACE LTD	Work Order:	65848
Description: Tunnel Bottom Panel	**Part Number:**	**D3649-1**
Inspection Dwg: D3649 **Rev:** B		**Page 1 of 2**

FIRST ARTICLE INSPECTION CHECKLIST

[X] **First Article** [ ] **Prototype**

Drawing Dimension	Tolerance	Actual Dimension	Accept	Reject	Method of Inspection	Comments
Ø0.098	+0.004/-0.001	.101	✓		V HB02	
Ø0.196	+0.005/-0.001	.200	✓		V	
Ø0.250	+0.005/-0.001	.250	✓		V	
0.400	+/-0.010	.401	✓		V	
0.385	+/-0.010	.382	✓		V	
0.250	+/-0.010	.254	✓		V	
44.57	+/-0.030	44.57	✓		T HB01	
11.70	+/-0.030	11.692	✓		PRO WS	
3.370	+/-0.030	3.373	✓		V	
13.76	+/-0.030	13.76	✓		T	
4.300	+/-0.010	4.301	✓		V	
10.11	+/-0.030	10.120	✓		PROWS	
12.90	+/-0.030	12.90	✓		T	
16.61	+/-0.030	16.61	✓		T	
15.80	+/-0.030	15.80	✓		T	
3.950	+/-0.010	3.950	✓		V	
0.42	+/-0.030	.418	✓		V	
0.41	+/-0.030	.407	✓		V	
0.85	+/-0.030	.85	✓		V	
19.64	+/-0.030	19.64	✓		T	
0.54	+/-0.030	.538	✓		V	
1.400	+/-0.010	1.396	✓		V	
2.63	+/-0.030	2.626	✓		V	
2.93	+/-0.030	2.927	✓		V	
1.49	+/-0.030	1.484	✓		V	
5.98	+/-0.030	5.980	✓		V	
0.54	+/-0.030	.536	✓		V	
2.20	+/-0.030	2.20	✓		V	
2.75	+/-0.030	2.751	✓		V	
2.48	+/-0.030	2.484	✓		V	

Dart Aerospace Ltd

W/O:		WORK ORDER CHANGES					
DATE	STEP	PROCEDURE CHANGE	By	Date	Qty	Approval Chief Eng / Prod Mgr	Approval QC Inspector

Part No: ______________ **PAR #:** _______ **Fault Category:** ______________ **NCR:** Yes No **DQA:** _____ **Date:** _________

Resolution: ______________ **Disposition:** ______________ **QA: N/C Closed:** __________ **Date:** _________

NCR:		WORK ORDER NON-CONFORMANCE (NCR)						
DATE	STEP	Description of NC Section A	Corrective Action Section B			Verification Section C	Approval Chief Eng	Approval QC Inspector
			Initial Chief Eng	Action Description Chief Eng	Sign & Date			

NOTE: Date & initial all entries

DART AEROSPACE LTD	Work Order:	65548
Description: Tunnel Bottom Panel	Part Number:	D3649-1
Inspection Dwg: D3649 Rev: B		Page 2 of 2

FIRST ARTICLE INSPECTION CHECKLIST

[X] First Article [ ] Prototype

Drawing Dimension	Tolerance	Actual Dimension	Accept	Reject	Method of Inspection	Comments
1.16	+/-0.030	1.165	✓		V HB02	
3.38	+/-0.030	3.375	✓		V	
2.00	+/-0.030	2.00	✓		V	
0.90	+/-0.030	.902	✓		V	
16.64	+/-0.030	16.64	✓		T HB01	
0.48	+/-0.030	.474	✓		V	
13.80	+/-0.030	13.80	✓		T	
0.46	+/-0.030	.458	✓		V	
11.76	+/-0.030	11.750	✓		PRO W3	
1.23	+/-0.030	1.227	✓		V	
0.88	+/-0.030	.870	✓		V	
18.46	+/-0.030	18.46	✓		T	
5.23	+/-0.030	5.232	✓		V	
1.932	+/-0.010	1.930	✓		V	
1.943	+/-0.010	1.940	✓		V	
5.02	+/-0.030	5.021	✓		V	
1.820	+/-0.010	1.818	✓		V	
0.70	+/-0.030	.704	✓		V	
2.100	+/-0.010	2.103	✓		V	
2.33	+/-0.030	2.334	✓		V	
0.94	+/-0.030	.938	✓		V	
3.30	+/-0.030	3.292	✓		V	
1.900	+/-0.010	1.903	✓		V	
0.61	+/-0.030	.607	✓		V	

Measured by:	IB	Audited by:	S	Prototype Approval:	N/A
Date:	11-1-26	Date:	11Oct27	Date:	N/A

Rev	Date	Change		Revised by	Approved
A	08.04.17	New Issue	P/O D3649-041	KJ/DD [signature]	[signature]

Dart Aerospace Ltd

W/O:	WORK ORDER CHANGES						
DATE	STEP	PROCEDURE CHANGE	By	Date	Qty	Approval Chief Eng / Prod Mgr	Approval QC Inspector

Part No: ____________ **PAR #:** ______ **Fault Category:** ____________ **NCR:** Yes No **DQA:** _____ **Date:** _________

Resolution: ____________ **Disposition:** ____________ **QA: N/C Closed:** __________ **Date:** _________

NCR:	WORK ORDER NON-CONFORMANCE (NCR)							
DATE	STEP	Description of NC Section A	Corrective Action Section B			Verification Section C	Approval Chief Eng	Approval QC Inspector
			Initial Chief Eng	Action Description Chief Eng	Sign & Date			

NOTE: Date & initial all entries

#65548

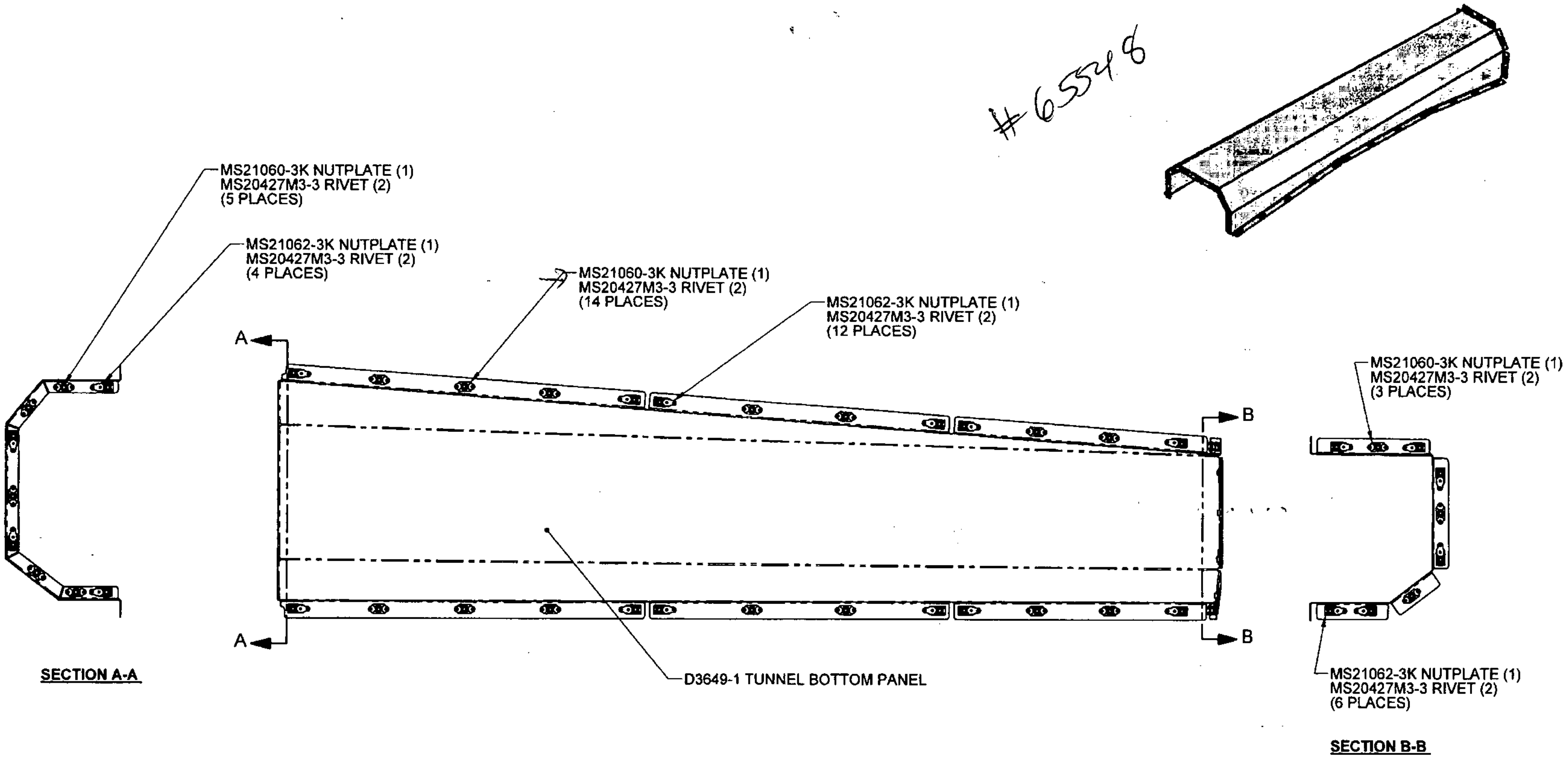

D3649-041 BOTTOM PANEL ASSEMBLY

RELEASED 08.03.26

PART LIST

QTY -041	PART NUMBER	DESCRIPTION
X	D3649-041	TUNNEL BOTTOM PANEL ASSY.
1	D3649-1	TUNNEL BOTTOM PANEL
88	MS20427M3-3	RIVET
22	MS21060-3K	NUTPLATE
22	MS21062-3K	NUTPLATE

REV.	DESCRIPTION	BY	DATE
B	PAGE 3: MS20427M3 WAS MS20427M-3	RF	08.01.07
A	NEW ISSUE	RF	07.11.07

DESIGN	RF	**DART AEROSPACE LTD** HAWKESBURY, ONTARIO, CANADA
DRAWN	RF	
CHECKED	[signature]	DRAWING NO. D3649 — REV. B — SHEET 1 OF 3
MFG. APPR.	[signature]	
APPROVED	[signature]	TITLE BOTTOM PANEL ASSEMBLY — SCALE 1:5
DE APPR.	[signature]	
DATE	08.01.07	

COPYRIGHT © 2007 BY DART AEROSPACE LTD
THIS DOCUMENT IS PRIVATE AND CONFIDENTIAL AND IS SUPPLIED ON THE EXPRESS CONDITION THAT IT IS NOT TO BE USED FOR ANY PURPOSE OR COPIED OR COMMUNICATED TO ANY OTHER PERSON WITHOUT WRITTEN PERMISSION FROM DART AEROSPACE LTD.

Dart Aerospace Ltd

W/O:		WORK ORDER CHANGES					
DATE	**STEP**	**PROCEDURE CHANGE**	**By**	**Date**	**Qty**	**Approval** Chief Eng / Prod Mgr	**Approval** QC Inspector

Part No: ____________________ **PAR #:** _______ **Fault Category:** __________________ **NCR:** Yes No **DQA:** _____ **Date:** _________

Resolution: ____________________ **Disposition:** ____________________ **QA: N/C Closed:** __________ **Date:** _________

NCR:		WORK ORDER NON-CONFORMANCE (NCR)						
			Corrective Action Section B					
DATE	**STEP**	**Description of NC** Section A	**Initial** Chief Eng	**Action Description** Chief Eng	**Sign & Date**	**Verification** Section C	**Approval** Chief Eng	**Approval** QC Inspector

NOTE: Date & initial all entries

H:\fFORMS\Quality Assurance\approved QA\NCRWO RevE

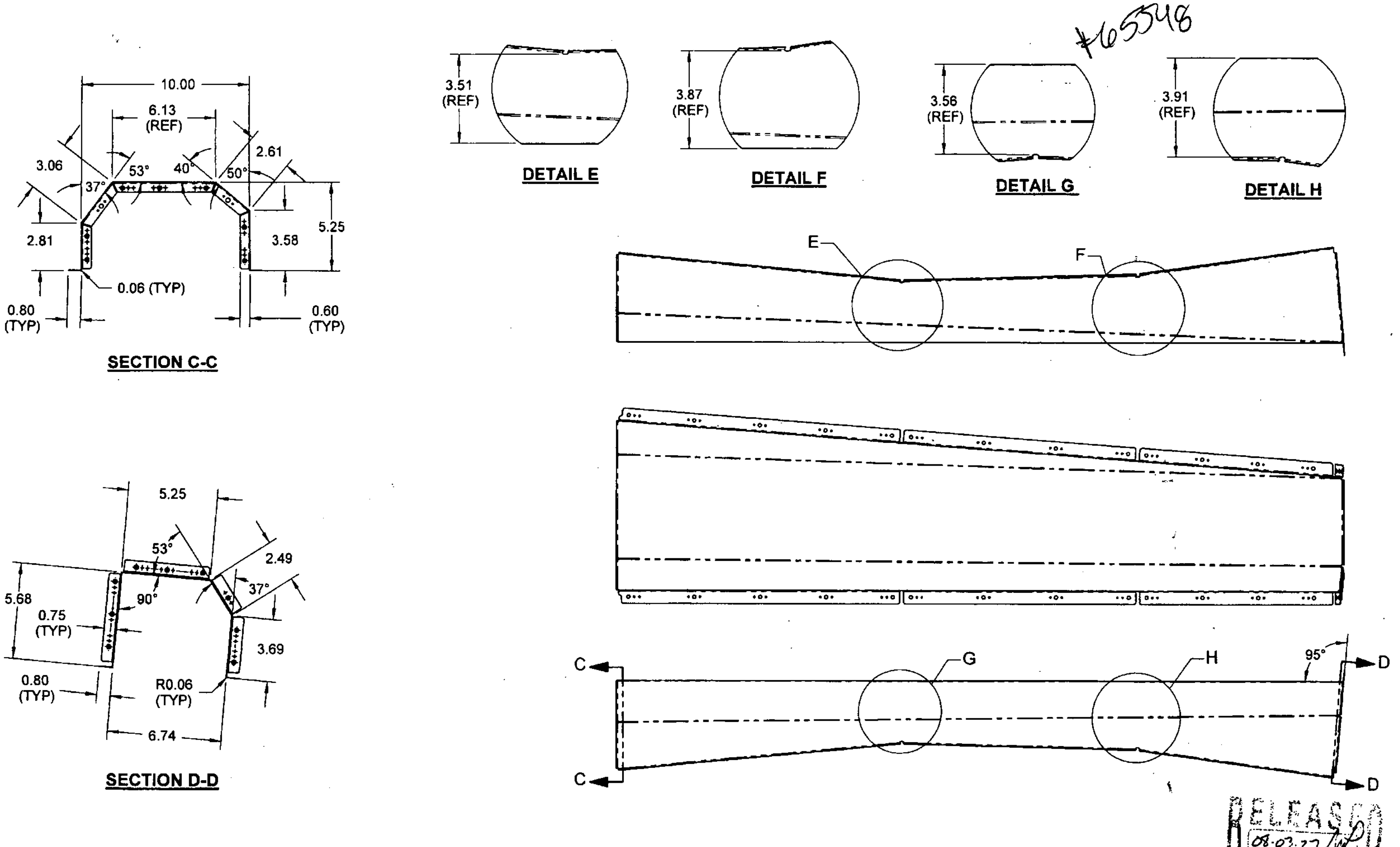

RELEASED 08.03.27

D3649-1 TUNNEL BOTTOM PANEL
(MAKE FROM D3649-1F)

DESIGN	RF	DART AEROSPACE LTD HAWKESBURY, ONTARIO, CANADA	
DRAWN	RF		
CHECKED		DRAWING NO. D3649	REV. B SHEET 2 OF 3
MFG. APPR.			
APPROVED		TITLE BOTTOM PANEL ASSEMBLY	SCALE 1:6
DE APPR.			
DATE	08.01.07	COPYRIGHT © 2007 BY DART AEROSPACE LTD THIS DOCUMENT IS PRIVATE AND CONFIDENTIAL AND IS SUPPLIED ON THE EXPRESS CONDITION THAT IT IS NOT TO BE USED FOR ANY PURPOSE OR COPIED OR COMMUNICATED TO ANY OTHER PERSON WITHOUT WRITTEN PERMISSION FROM DART AEROSPACE LTD.	

Dart Aerospace Ltd

W/O:		WORK ORDER CHANGES					
DATE	STEP	PROCEDURE CHANGE	By	Date	Qty	Approval Chief Eng / Prod Mgr	Approval QC Inspector

Part No: ____________________ **PAR #:** _______ **Fault Category:** __________________ **NCR:** Yes No **DQA:** _____ **Date:** _________

Resolution: ____________________ **Disposition:** ____________________ **QA: N/C Closed:** __________ **Date:** _________

NCR:		WORK ORDER NON-CONFORMANCE (NCR)						
DATE	STEP	Description of NC Section A	Corrective Action Section B			Verification Section C	Approval Chief Eng	Approval QC Inspector
			Initial Chief Eng	Action Description Chief Eng	Sign & Date			

NOTE: Date & initial all entries

#65548

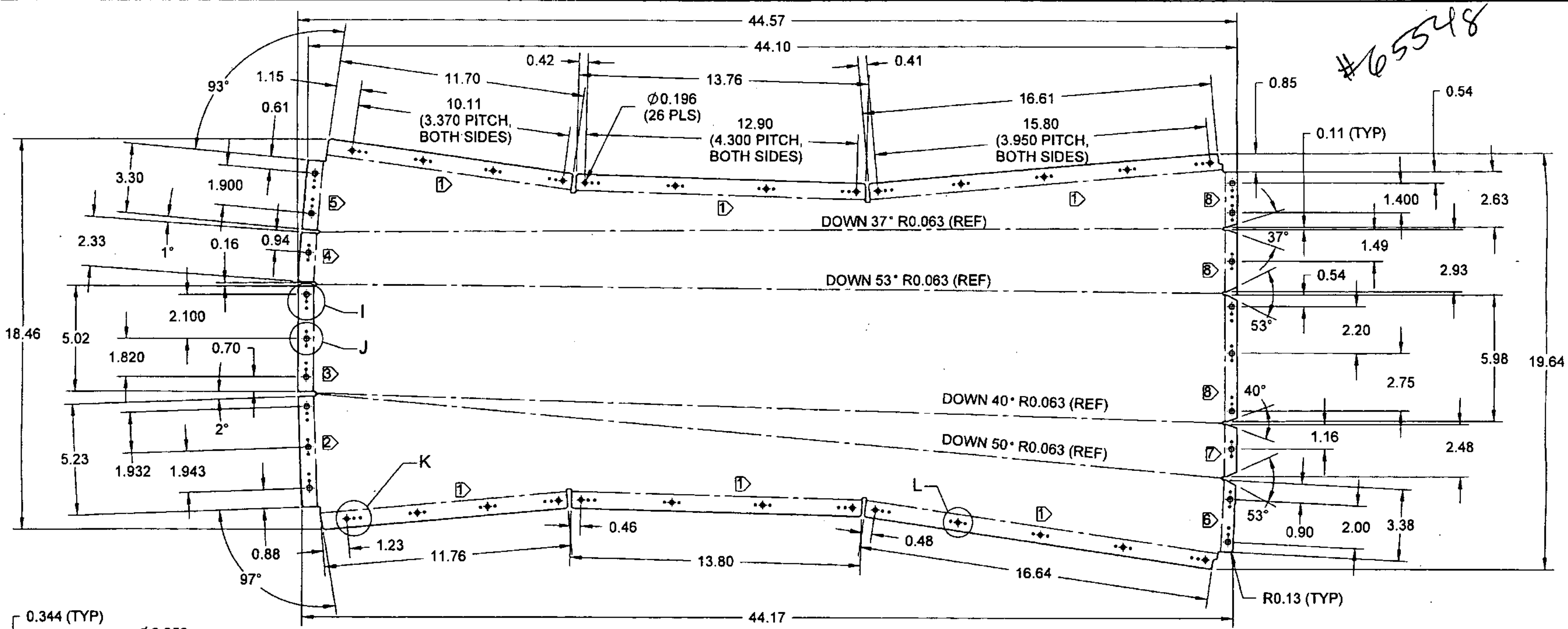

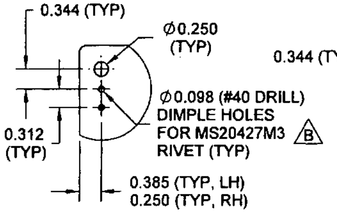

DETAIL I
(10 PLS)

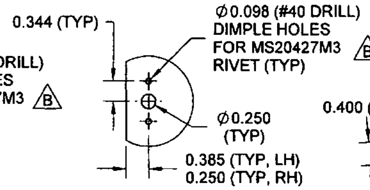

DETAIL J
(8 PLS)

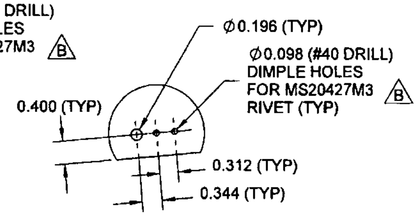

DETAIL K
(12 PLS)

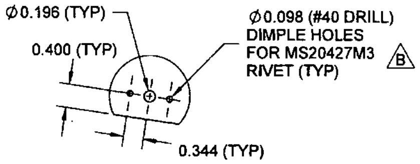

DETAIL L
(14 PLS)

1▷ UP 90° R 0.063
2▷ UP 94° R 0.063
3▷ UP 85° R 0.063
4▷ UP 87° R 0.063
5▷ UP 90° R 0.063
6▷ UP 94° R 0.063
7▷ DOWN 91° R 0.063
8▷ DOWN 90° R 0.063

RELEASED 08.03.27

D3649-1F FLAT PATTERN

NOTES:
1) MATERIAL: AISI 304/316 STAINLESS STEEL 0.018 THICK (26 GAUGE) SHEET, PER MIL-S-5019 (REF. DART SPEC. M304S26GA)
2) FINISH: NONE
3) TOLERANCES: PER DART QSI 018 UNLESS OTHERWISE NOTED
4) UNITS: INCHES UNLESS OTHERWISE NOTED
5) BREAK SHARP EDGES: 0.005 TO 0.010 MAX
6) IDENTIFICATION: NONE
7) WEIGHT: 4.32 lbs

DESIGN	RF	**DART AEROSPACE LTD** HAWKESBURY, ONTARIO, CANADA
DRAWN	RF	
CHECKED	LE	DRAWING NO. D3649 — REV. B — SHEET 3 OF 3
MFG. APPR.	[signature]	
APPROVED	[signature]	TITLE: BOTTOM PANEL ASSEMBLY — SCALE 1:5
DE APPR.	[signature]	
DATE	08.01.07	

COPYRIGHT © 2007 BY DART AEROSPACE LTD
THIS DOCUMENT IS PRIVATE AND CONFIDENTIAL AND IS SUPPLIED ON THE EXPRESS CONDITION THAT IT IS NOT TO BE USED FOR ANY PURPOSE OR COPIED OR COMMUNICATED TO ANY OTHER PERSON WITHOUT WRITTEN PERMISSION FROM DART AEROSPACE LTD.

Dart Aerospace Ltd

W/O:		WORK ORDER CHANGES					
DATE	STEP	PROCEDURE CHANGE	By	Date	Qty	Approval Chief Eng / Prod Mgr	Approval QC Inspector

Part No: ____________________ **PAR #:** _______ **Fault Category:** __________________ **NCR:** Yes No **DQA:** _____ **Date:** _________

Resolution: ____________________ **Disposition:** ____________________ **QA: N/C Closed:** __________ **Date:** _________

NCR:		WORK ORDER NON-CONFORMANCE (NCR)						
DATE	STEP	Description of NC Section A	Corrective Action Section B			Verification Section C	Approval Chief Eng	Approval QC Inspector
			Initial Chief Eng	Action Description Chief Eng	Sign & Date			

NOTE: Date & initial all entries

Downloaded from http://www.everyspec.com on 2011-02-16T13:17:05.

DIS /TION STATEMENT A Approved for public release; distribution is unlimited

This military standard is approved for use by all Departments and Agencies of the Department of Defense selection for all new engineering and design applications and for repetitive use shall be made from this document when applicable

REVIEWER ACTIVITIES
ARMY-AR
NAVY-SH
AIR FORCE-99
DLA-IS

USER ACTIVITIES
ARMY-CR,MI
NAVY-OS

FED SUP CLASS 5310

CONFIGURATION OF NUT OPTIONAL WITHIN THE LIMITATIONS IMPOSED BY DIMENSIONS AND REQUIREMENTS AS SPECIFIED HEREIN.

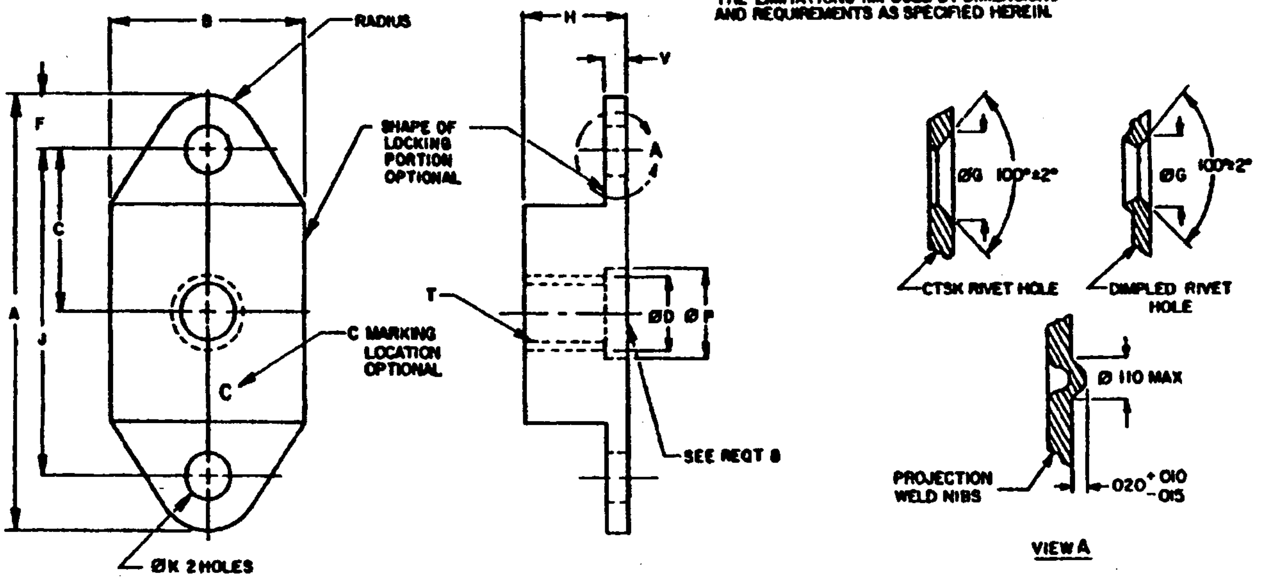

TABLE I DASH NUMBERS AND DIMENSIONS

DASH NUMBERS 450°F PLAIN HOLES	450°F CTSK OR DIMPLED HOLES	450°F WELDING PROJECTIONS	800°F PLAIN HOLES	800°F CTSK OR DIMPLED HOLES	800°F WELDING PROJECTIONS	T THREAD SIZES	A MAX	B MAX	B MIN	C ±.005	ØD MIN	F MIN	ØG ±.010	H 1/ MAX	J ±.002	ØK 2/ +.005 -.000	ØP MAX	ØP MIN	V MAX	AXIAL STRENGTH LBS/MIN	WEIGHT LBS/100
L04	L04K	L04W	-04	-04K	-04W	.112-40 UNJC-3B	.940	.616	.290	.344	—	.100	.200	.175	.600	.090	.270	.172	.032	750	.38
L06	L06K	L06W	-06	-06K	-06W	.138-32 UNJC-3B	.940	.616	.290	.344	—	.100	.200	.201	.600	.090	.270	.190	.032	1,130	.39
L08	L08K	L08W	-08	-08K	-08W	.164-32 UNJC-3B	.940	.616	.290	.344	.160	.100	.200	.250	.600	.090	.270	.224	.032	1,720	.40
L3	L3K	L3W	-3	-3K	-3W	.190-32 UNJF-3B	.940	.616	.290	.344	.190	.100	.200	.250	.600	.090	.270	.250	.032	2,460	.41
L4	L4K	L4W	-4	-4K	-4W	.250-28 UNJF-3B	1.292	.516	.350	.500	.254	.100	.200	.201	1.000	.090	.330	.310	.032	4,500	.90
L5	L5K	L5W	-5	-5K	-5W	.3125-24 UNJF-3B	1.292	.609	.412	.500	.317	.125	.230	.328	1.000	.130	.392	.372	.045	7,390	1.26
L6	—	L6W	-6	—	-6W	.375-24 UNJF-3B	1.292	.600	.475	.500	.379	.125	.230	.344	1.000	.130	.455	.435	.055	11,450	1.55
L7	—	L7W	-7	—	-7W	.4375-20 UNJF-3B	1.677	.719	.672	.563	.442	.146	.230	.504	1.125	.161	.517	.497	.115	15,450	3.30
L8	—	L8W	-8	—	-8W	.500-20 UNJF-3B	1.602	.859	.796	.625	.504	.146	.230	.630	1.250	.161	.580	.560	.115	21,110	4.00

1/ MINIMUM "H" NOT SPECIFIED, LIMITED ONLY BY STRENGTH REQUIREMENTS OF SPECIFICATION
2/ DIMPLED RIVET HOLE TOLERANCE FOR Ø "K" IS +.015 -.000

APPROVED 23 JUL 64 REVISED (F) 30 SEP 87

(F) ENTIRE STANDARD REVISED

P.A. NAVY-AS Other Cust ARMY-AV AIR FORCE-11	INTERNATIONAL INTEREST	TITLE NUT, SELF-LOCKING, PLATE, TWO LUG, FLOATING, LOW HEIGHT, CRES, 125 KSI FTU, 450° F & 800° F	MILITARY STANDARD MS 21060
PROCUREMENT SPECIFICATION MIL-N-25027	SUPERSEDES: NAS 686, NAS 1031 (IN PART)		PAGE 1 OF 3

AMSC N/A DD FORM 1 MAY 73 672-1 (COORDINATED) PREVIOUS EDITIONS OF THIS FORM ARE OBSOLETE 5310-1570

Downloaded from http://www.everyspec.com on 2011-02-16T13:17:05.

FED SUP CLASS 5310

REQUIREMENTS:

1. MATERIAL: CORROSION RESISTANT STEEL, TYPE A286, (UNS S66286) IN ACCORDANCE WITH AMS5525, AMS5732 OR AMS5737.
2. FINISH: ONLY 800°F NUTS: SILVER PLATE ALL THREADED SURFACES OF NUT ELEMENT IN ACCORDANCE WITH AMS 2410. THREADS SHALL SHOW COMPLETE COVERAGE. SILVER PLATING ON ALL OTHER SURFACES OPTIONAL. TARNISHING OR DISCOLORATION OF SILVER NOT CAUSE FOR REJECTION.
3. LUBRICANT: ONLY 450°F NUTS: DRY FILM LUBRICANT IN ACCORDANCE WITH MIL-N-25027.
4. DIMENSIONING AND TOLERANCING: DIMENSIONING AND TOLERANCING SHALL BE IN ACCORDANCE WITH ANSI Y14.5M.
5. HARDNESS: 49RC, MAX.
6. THREADS: THREADS BEFORE LUBRICATION IN ACCORDANCE WITH MIL-S-8879.
7. SURFACE TEXTURE: SURFACE TEXTURE, UNLESS OTHERWISE SPECIFIED, SHALL NOT EXCEED 125 MICROINCHES, IN ACCORDANCE WITH ANSI B46.1.
8. COUNTERBORE/COUNTERSINK: ON SIZE .164 AND LARGER, THREAD RELIEF SHALL BE .062 MINIMUM; ON SIZE .138 AND SMALLER, COUNTERSINK OR RADIUSED WITHIN "F" DIAMETER.
9. PERFORMANCE: SEE PROCUREMENT SPECIFICATION, EXCEPT 450°F DRY FILM LUBRICATED NUTS LIMITED TO FIVE REUSE CYCLES.
10. FLOAT OF NUT PORTION: FLOAT OF NUT PORTION OF ASSEMBLY SHALL NOT BE LESS THAN .030 RADIALLY FROM CENTERED POSITION. NUT ELEMENT SHALL BE CAPABLE OF ENGAGEMENT WITH BOLT IN THE MAXIMUM MISALIGNED POSITION
11. PART NUMBER: THE PART NUMBER SHALL CONSIST OF THE BASIC MS NUMBER FOLLOWED BY A DASH NUMBER FROM TABLE I.

EXAMPLE: MS21060L4K
- L4K — DASH NUMBER
- MS21060 — BASIC MS NUMBER

MS21060L4K INDICATES: NUT, SELF-LOCKING, PLATE, TWO LUG, FLOATING, LOW HEIGHT, CRES; 125 KSI Ftu, 450°F; DRY FILM LUBRICATION; .250-28 UNJF-3B; COUNTERSUNK OR DIMPLED HOLES.

NOTES:

1. ALL DIMENSIONS ARE IN INCHES.
2. IN THE EVENT OF A CONFLICT BETWEEN THE TEXT OF THIS STANDARD AND THE REFERENCES CITED HEREIN, THE TEXT OF THIS STANDARD SHALL TAKE PRECEDENCE.
3. REFERENCED GOVERNMENT (OR NON-GOVERNMENT) DOCUMENTS OF THE ISSUE LISTED IN THAT ISSUE OF THE DEPARTMENT OF DEFENSE INDEX OF SPECIFICATIONS AND STANDARDS (DODISS) SPECIFIED IN THE SOLICITATION FORM A PART OF THIS STANDARD TO THE EXTENT SPECIFIED HEREIN.
4. DESIGN AND USAGE LIMITATIONS: THESE NUTS ARE DESIGNED TO DEVELOP THE TENSILE STRENGTH OF BOLTS AND SCREWS WITH AN ULTIMATE TENSILE STRENGTH OF 125 KSI BASED ON THE CROSS SECTION AREA AT THE BASIC ROOT DIAMETER OF THE THREADS. THESE NUTS ARE DESIGNED TO BE USED ON 3A EXTERNAL THREADS. THESE NUTS SHALL BE USED IN ACCORDANCE WITH THE LIMITATIONS OF MS33588. ONLY NUTS FOR WHICH THERE ARE QUALIFIED PRODUCTS LISTED ON QPL 25027 SHALL BE USED.

USER ACTIVITIES
ARMY-CR, MI
NAVY-OS

REVIEWER ACTIVITIES
ARMY-AR
NAVY-SH
AIR FORCE-99
DLA-IS

This standard is approved for use by all Departments and Agencies of the Department of Defense [illegible] shall be made from the [illegible] for all item engineering and design applications [illegible] when applicable

APPROVED 23 JUL 64 REVISED (F) FOR CHANGES SEE PAGES 1,2 AND 3

PA NAVY-AS Other Cust ARMY-AV AIR FORCE-11	INTERNATIONAL INTEREST	TITLE NUT, SELF-LOCKING, PLATE, TWO LUG, FLOATING, LOW HEIGHT, CRES, 125 KSI FTU, 450° F & 800° F	MILITARY STANDARD MS21060
PROCUREMENT SPECIFICATION MIL-N-25027	SUPERSEDES NAS 686, NAS 1031 (IN PART)		PAGE 2 OF 3

Downloaded from http://www.everyspec.com on 2011-02-16T13:17:05.

FED SUP CLASS
5310

INTERCHANGEABILITY RELATIONSHIP

MS21060 NUTS CAN UNIVERSALLY REPLACE NAS686 AND NAS1031 NUTS OF LIKE MATERIAL, THREAD SIZE, LUBRICANT (DRY FILM OR SILVER PLATE) RIVET SPACING AND FASTENING METHOD (PLAIN RIVET HOLES, DIMPLED OR COUNTERSUNK RIVET HOLES OR PROJECTION WELDING), BUT THESE NAS686 AND NAS1031 NUTS CANNOT UNIVERSALLY REPLACE MS21060 NUTS.

INTERCHANGEABILITY TABLE

CANCELLED PART NUMBER	SUBSTITUTIVE PART NUMBER	CANCELLED PART NUMBER	SUBSTITUTIVE PART NUMBER	CANCELLED PART NUMBER	SUBSTITUTIVE PART NUMBER	CANCELLED PART NUMBER	SUBSTITUTIVE PART NUMBER
NAS686C04	MS21060-04	—	MS21060-3M	NAS1031C04	MS21060-04	NAS1031C4M	MS21060-4M
NAS686C04K	MS21060-04K	NAS686C3M	MS21060L3	NAS1031C04K	MS21060-04K	NAS1031C5	MS21060-5
—	MS21060-04M	NAS686C3MK	MS21060L3K	NAS1031C04M	MS21060-04M	NAS1031C5K	MS21060-5K
NAS686C04M	MS21060L04	—	MS21060L3M	NAS1031C06	MS21060-06	NAS1031C5M	MS21060-5M
NAS686C04MK	MS21060L04K	NAS686C4	MS21060-4	NAS1031C06K	MS21060-06K	NAS1031C6	MS21060-6
—	MS21060L04M	NAS686C4K	MS21060-4K	NAS1031C06M	MS21060-06M	NAS1031C6M	MS21060-6M
NAS686C06	MS21060-06	—	MS21060-4M	NAS1031C08	MS21060-08	NAS1031C7	MS21060-7
NAS686C06K	MS21060-06K	NAS686C4M	MS21060L4	NAS1031C08K	MS21060-08K	NAS1031C7M	MS21060-7M
—	MS21060-06M	NAS686C4MK	MS21060L4K	NAS1031C08M	MS21060-08M	NAS1031C8	MS21060-8
NAS686C06M	MS21060L06	—	MS21060L4M	NAS1031C3	MS21060-3	NAS1031C8M	MS21060-8M
NAS686C06MK	MS21060L06K	NAS686C5	MS21060-5	NAS1031C3K	MS21060-3K		
—	MS21060L06M	NAS686C5K	MS21060-5K	NAS1031C3M	MS21060-3M		
NAS686C08	MS21060-08	—	MS21060-5M	NAS1031C4	MS21060-4		
NAS686C08K	MS21060-08K	NAS686C5M	MS21060L5	NAS1031C4K	MS21060-4K		
—	MS21060-08M	NAS686C5MK	MS21060L5K				
NAS686C08M	MS21060L08	—	MS21060L5M				
NAS686C08MK	MS21060L08K	NAS686C6	MS21060-6				
—	MS21060L08M	—	MS21060-6M				
NAS686C3	MS21060-3	NAS686C6M	MS21060L6				
NAS686C3K	MS21060-3K	—	MS21060L6M				

USER ACTIVITIES
ARMY-CR, MI
NAVY-OS

REVIEWER ACTIVITIES
ARMY-AR
NAVY-SH
AIR FORCE-99
DLA-IS

This military standard is approved for use by all Departments and Agencies of the Department of Defense. Selection for all new engineering and design applications and for repetitive use shall be made from this document when applicable.

APPROVED 23 JUL 64 REVISED (F) FOR CHANGES SEE PAGES 1,2 AND 3

PA NAVY-AS Other Cust ARMY-AV AIR FORCE-11	INTERNATIONAL INTEREST	TITLE NUT, SELF-LOCKING, PLATE, TWO LUG, FLOATING, LOW HEIGHT, CRES, 125 KSI FTU, 450°F & 800°F	MILITARY STANDARD MS21060
PROCUREMENT SPECIFICATION MIL-N-25027	SUPERSEDES NAS 686, NAS 1031 (IN PART)		PAGE 3 OF 3